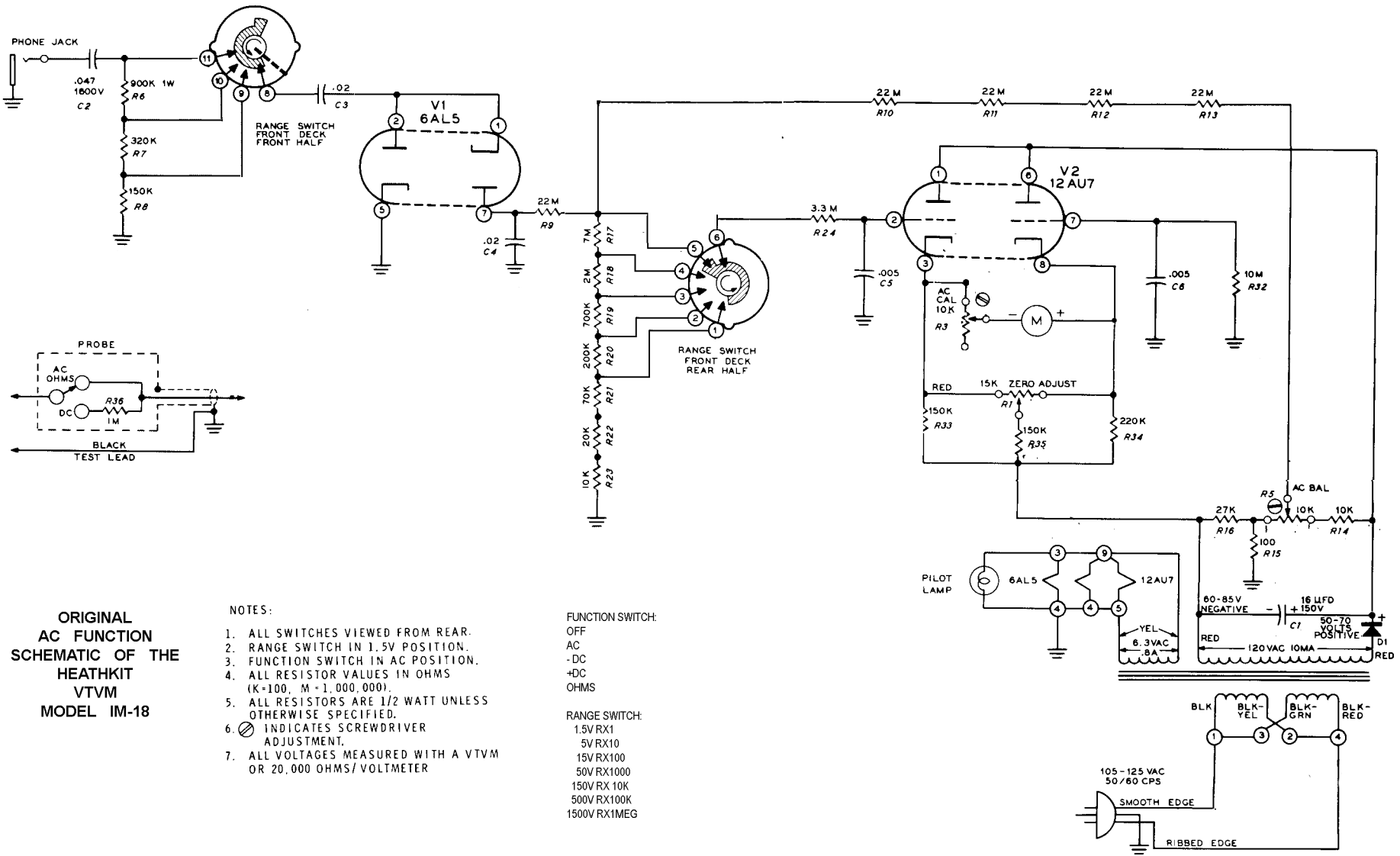

ORIGINAL AC FUNCTION SCHEMATIC OF THE HEATHKIT VTVM MODEL IM-18

NOTES:

1. ALL SWITCHES VIEWED FROM REAR.
2. RANGE SWITCH IN 1.5V POSITION.
3. FUNCTION SWITCH IN AC POSITION.
4. ALL RESISTOR VALUES IN OHMS (K=100, M=1,000,000).
5. ALL RESISTORS ARE 1/2 WATT UNLESS OTHERWISE SPECIFIED.
6. ⊘ INDICATES SCREWDRIVER ADJUSTMENT.
7. ALL VOLTAGES MEASURED WITH A VTVM OR 20,000 OHMS/VOLTMETER

FUNCTION SWITCH:
OFF
AC
-DC
+DC
OHMS

RANGE SWITCH:
1.5V RX1
5V RX10
15V RX100
50V RX1000
150V RX 10K
500V RX100K
1500V RX1MEG