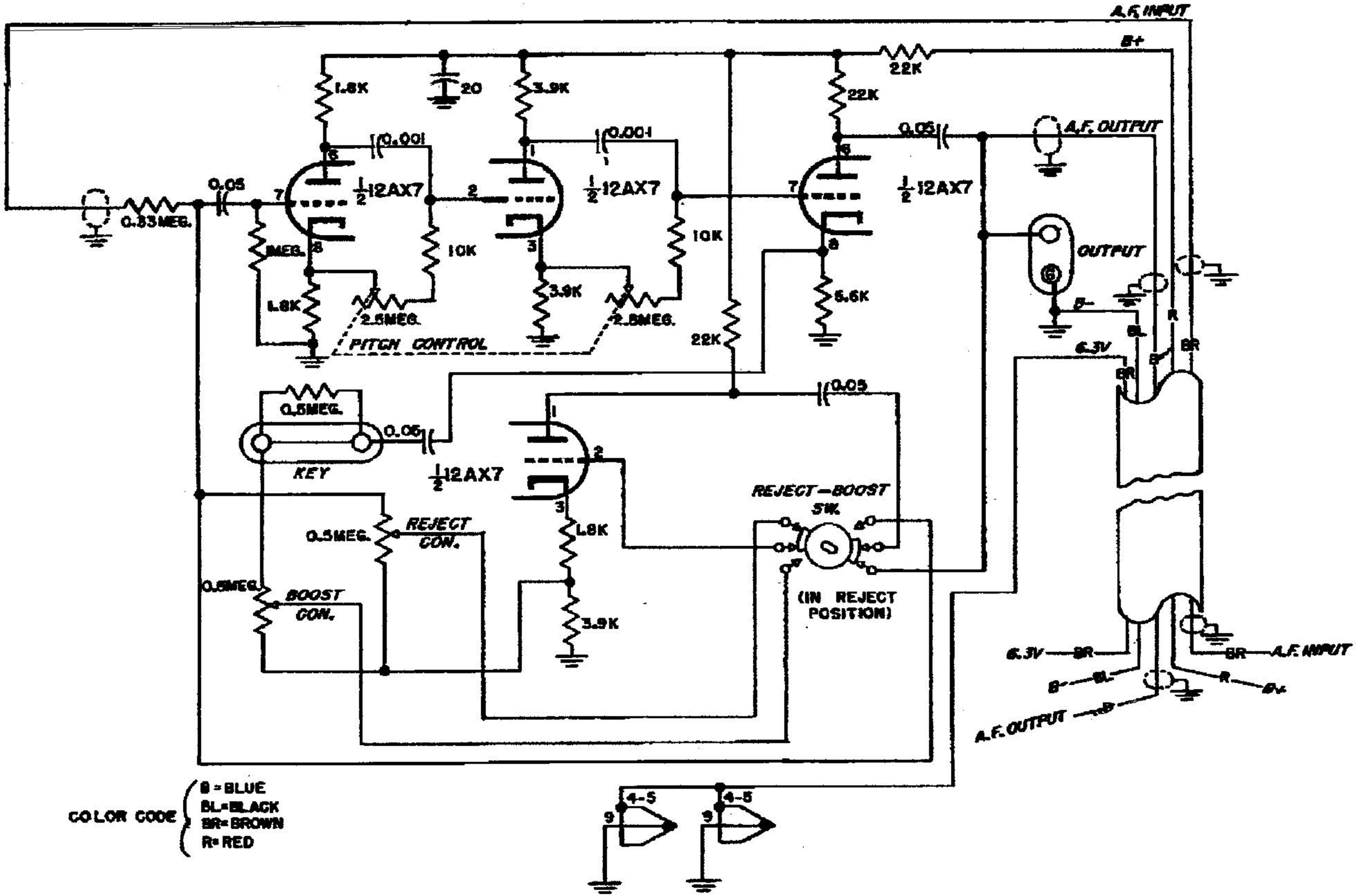

Figure No. 2. Schematic Diagram of Select-O-Ject